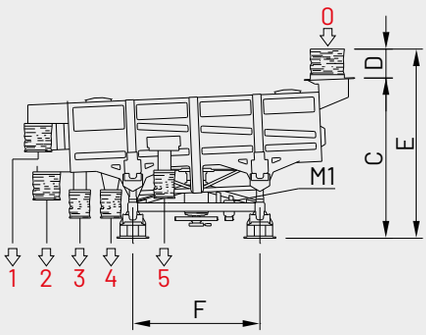

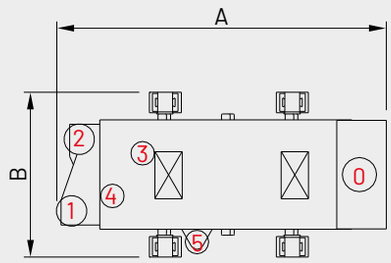

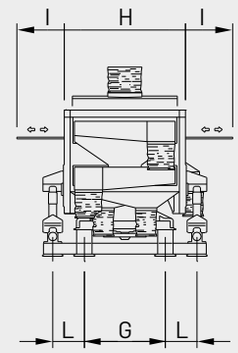

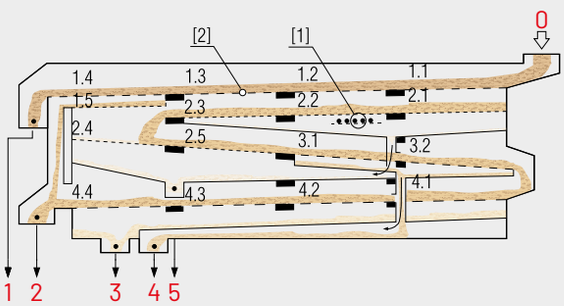

0 = FEEDING

1-2 = FRACTIONS

M1 = SCREENING BOX MOVEMENT

[1] AC : AUTO-CLEANING BALL-BOUNCING SYSTEM FOR SCREENS AVAILABLE FOR ALL DECKS
[2] A WIDE RANGE OF MESH SIZES ARE AVAILABLE FOR ANY SCREENING NEEDS

MULTICROSS 41-52

ZIG-ZAG SCREENS - 41-52 m^2 SCREENING SURFACE

MODEL	OVERALL DIMENSIONS mm										INSTALLED POWER kW	WEIGHT APPROX. kg
	A	B	C	D	E	F	G	H	I	L	M1	
MULTICROSS 41-EJ	7730	3860	3830	600	4430	2980	1900	2560	1250	740	11	16600
MULTICROSS 52-EJ	7850	4300	3830	600	4430	3980	1900	3000	1500	960	15	17700